INSTRUCTIONS FOR ERECTING GALVO SHEDS

IDENTIFICATION OF PANELS:

Front: With door.

Back: Same size as front.

Sides: Two 0.78m panels.

Roof: One plain panel same as the back but has flashing along both ends.

GENERAL NOTES:

1. Packet of self tapping screws supplied with shed. If desired, 3.2mm pop rivets may be used instead.
2. When installed, ribs in sheeting face outwards for all panels.
3. Sheds installed without adequate anchoring to the ground could be extensively damaged in windy weather. A floor is essential.
4. One padbolt supplied to be fitted when the shed is complete.

INSTALLATION:

Do not attempt to erect in windy weather.

1. Tools required: Electric or battery drill, 3.3mm (or 1/8") drill bit, screwdriver.
2. Site for the shed must be level.
3. Place back panel in position and fit one side into place. See Fig 1.
4. From the outside, drill through the overlap at the corner and drive self-tapping screws firmly home. Use five screws or rivets, evenly spaced, for each corner. You may need a block to hold corner out when drilling. Extra fixings may be necessary in a windy area.
5. Repeat Step 4 for the second side.
6. Bring front door panel up to side walls and fasten each corner as before. The four walls are now securely fastened.
7. FIXING THE ROOF: Roughly square the walls and lift the roof on, allowing desired overhang front and back. Drill through lip section and top wall channel on one end of the shed and drive screws firmly home. Use 4 or 5 screws. Square shed by checking that roof overhang is even along the front. Drill and screw roof lip section at other end.
8. It is very important to fix down through the roof into top channel on front and back panels. 5 or 6 screws for each wall is sufficient
9. Attach padbolt to door using nuts and bolts supplied.
10. Remove all swarf and filings.

PLEASE NOTE:

- Ensure ground is level before fitting door latch.
- Door latch can be adjusted if it does not slide easily into the hasp. This may be adjusted by tapping a wedge under the wall of the shed, either immediately below the bolt or immediately below the hinges. A trial will soon show which is required.

ANCHORING THE SHED:

It is essential to firmly anchor the shed as soon as erection is completed, otherwise there is a risk of damage by wind. Refer to floor clamps at the bottom of this page. Temporary anchorage may be achieved by driving hold-down pegs into the ground and hooking over channel inside shed walls. A concrete slab could then be poured inside the shed, with finished level above the bottom wall channel.

PADBOLT ASSEMBLY:

Keeper for padbolt with 2 bolts, nuts and washers. 1 Padbolt with 4 bolts and nuts. Assemble as shown in diagram.

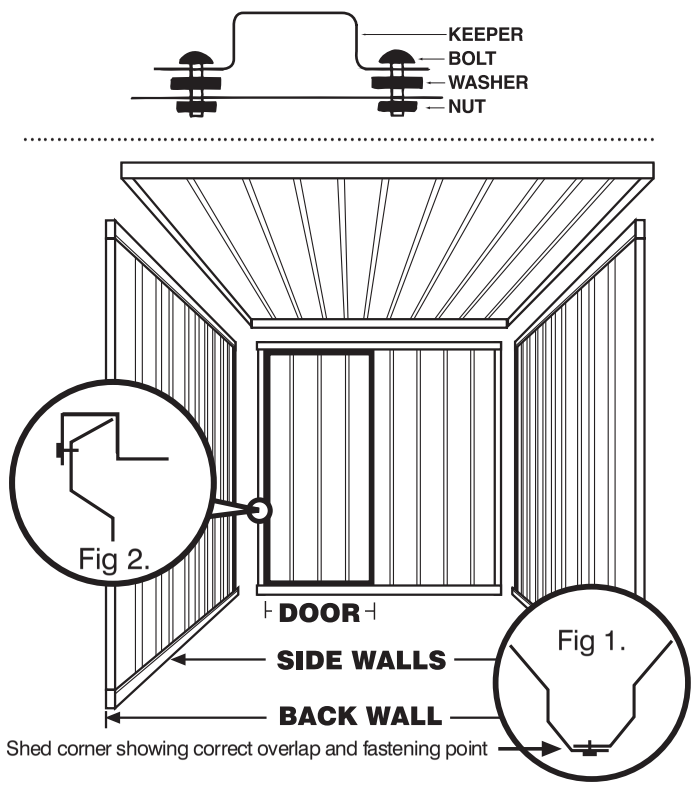

Shed corner showing correct overlap and fastening point

Recessed Floor Clamp

Recommended for specially poured concrete floors.
(Bolts available on request)

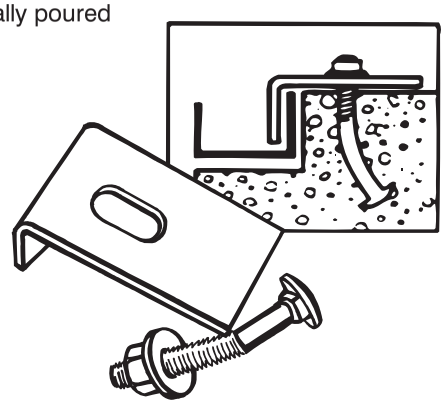

Flat Floor Clamp

For existing concrete slabs only
(Bolts available on request)

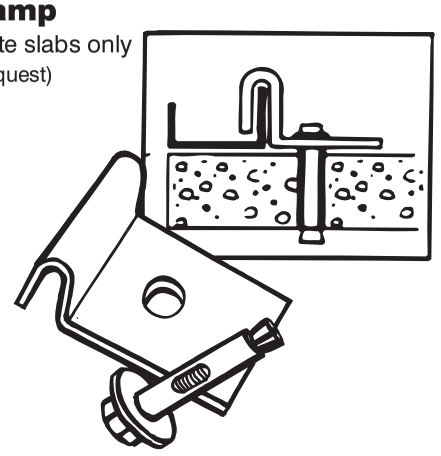

1.53m x 0.78m GARDEN SHED
PARTS LIST

The following parts are enclosed to make your shed:

a: 6x Galvalume sheets, 4 @ 1830mm x 780mm (back & sides).
2 @ 980 x 780 mm (roof).
b: 1x Galvalume sheet @ 1830mm long x 715mm wide. (Front)
c: 1x ⊔ shaped door jamb @ 1830mm long. (door jamb)
d: 2x "L" shaped roof flashings @ 980mm long. (roof)
e: 6x "U" channels, 2 @ 1515mm long (front, back and roof)
f: 4x "U" channels @ 735mm long (sides)
g: 2x "U" channels @ 793mm door spacers.
h: 1x packet of fixings and padbolt.
i: 1x Galvalume door sheet @ 1770mm long x 780mm wide.
j: 2x "U" channels @ 780mm (door ends)
k: 2x "U" channels @ 1770mm (door sides)
l: 1x flat door strap @ 310mm long.
m: 2x 50mm butt hinges and rivet pack.
n: 1x "Z" shaped door jamb @ 1830mm long.

CAUTION: Some parts have sharp edges and should be handled very carefully. We suggest the use of gloves when assembling. Measurements are approximate.

You will need the following tools to erect your shed:

1x battery or electric drill
1x 3.3mm (1/8th inch) drill bit
1x screwdriver (or riveter is best)
1x tape measure to position door strap in centre of door.

DO NOT ATTEMPT TO ERECT SHED IN WINDY WEATHER!

- External dimensions: 1530mm x 780mm.
- Internal dimensions: 1485mm x 735mm.

DOOR ASSEMBLY & PRE-HINGE INSTRUCTIONS

Door Assembly

PARTS NEEDED

(i) 1x Galvalume door sheet 1770mm
(j) 2x “U” channels 780mm
(K) 2x “U” channels 1770mm
(L) 1x door strap
(m) 2x 50mm Hinges

METHOD

Rivets are better for door assembly.

1: Attach channel (j) to ends of door sheet (i) through centre ribs only.

2: Attach channels (K) at 4 corners through channels (j) and door sheet (i) through all parts

3: Attach Door strap (L) in centre of the door fixing through ribs of door sheet (i) and through channels (K) at the sides.

4: Attach hinges (m) approx 150mm from top and bottom of door through channels (K). Fixings should be centred on channel (K) depth.

5: Turn your now assembled door over and fix 4 corners through channels (j) and (K).

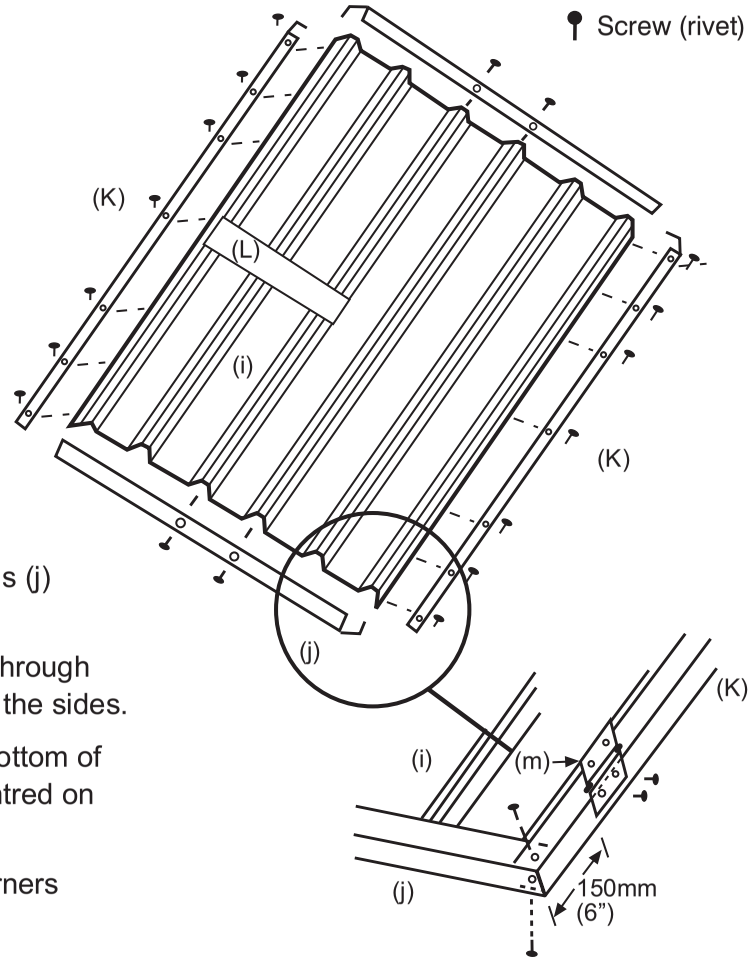

Hanging the door

PARTS NEEDED

(b): 1x Narrow Galvalume sheet
(n): 1x “Z” shaped door jamb.
and the door you have just assembled.

METHOD

1: Attach door jamb (n) to sheet (b) through outside rib nearest to narrow pan. Do not fix ends of door jamb (n) yet.

2: Lay door face down on sheet (b) approx 30mm down from top and 30mm up from bottom.

3: Fix hinges (m) through side of “Z” door jamb (n). The door is now pre-hung for you to assemble your front panel.

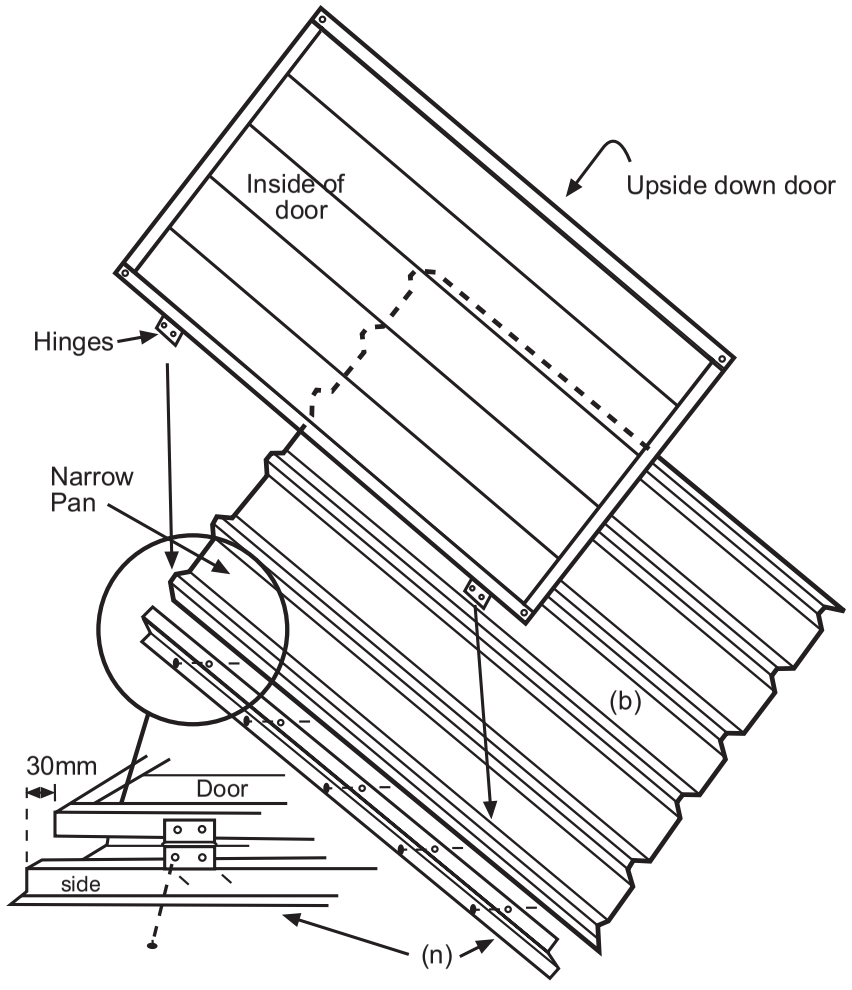

METHOD OF ASSEMBLY

This shed is made up of 5 panels viz:
Front, back roof and 2 sides. Each Panel is assembled from the parts supplied by drilling and screwing the pieces together as per drawings and instructions to form one complete unit. Complete assembly of Panels before beginning erection of shed. Screw channels to sheets in positions shown. Additional screws may be used if desired in end ribs.
You will need to assemble and pre-hinge door first.

DRAWINGS ARE DIAGRAMMATIC AND NOT NECESSARILY TO DETAIL

3. FRONT
- 2 x channels (E)
- 2 x 793 door spacers (G)
- 1 x ⊔ shaped door jamb (C)
- 1 x Narrow sheet with door attached (B & i)

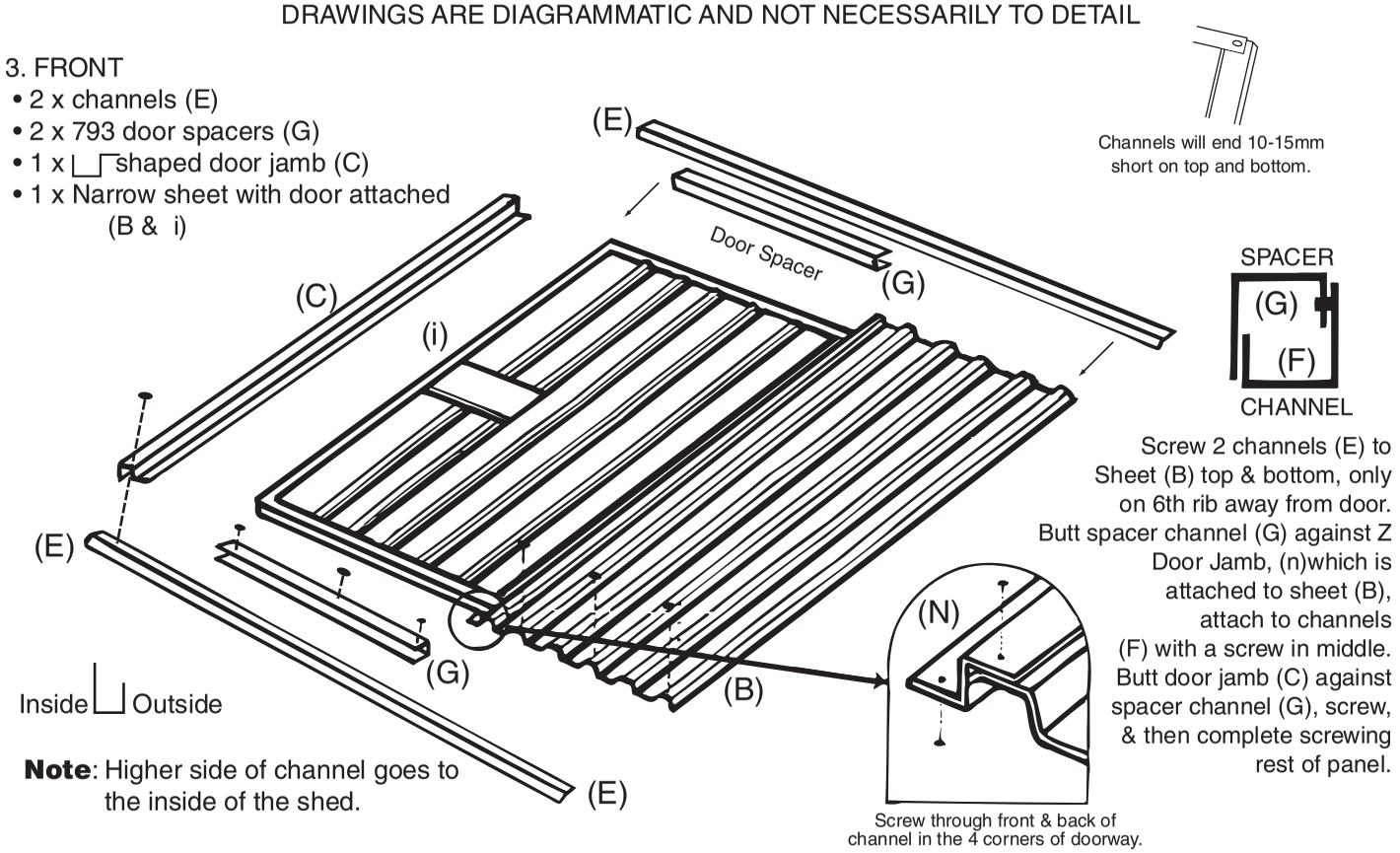

Note: Higher side of channel goes to the inside of the shed.

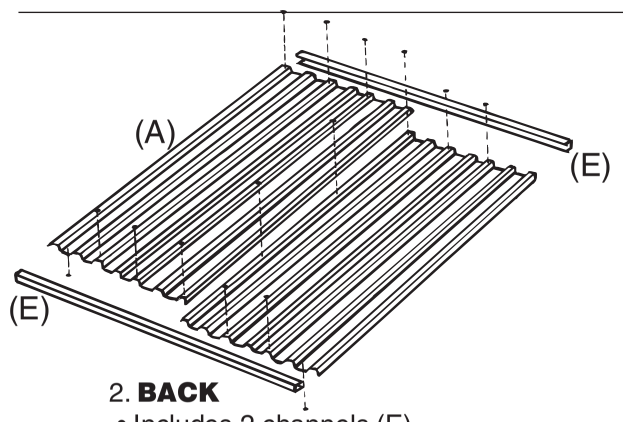

2. **BACK**
- Includes 2 channels (E)
- 2 Sheets (A) 1830 x 780 mm

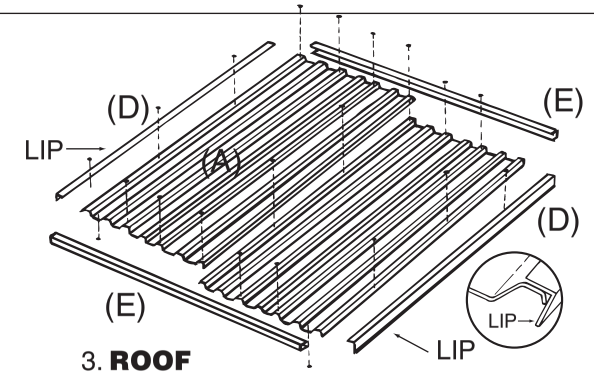

3. **ROOF**
- Includes 2 channels 1.5m long (E)
- 2 Sheets (A) 980 x 780 mm
- 2 “L” flashings (D)

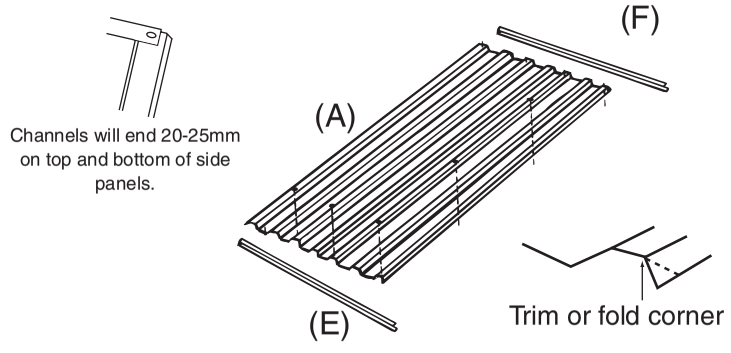

4. **TWO IDENTICAL SIDE SECTIONS**
- Includes 4 channels 735mm long (F)
  2 sheets @ 1830 x 780 mm (A)

Refer to back page for shed erection.

CAUTION:
Maintain a firm grip when handling unfinished panels as the edges can cause injury if handled carelessly.