# STREAMLINE

CARPORT ASSEMBLY INSTRUCTIONS

www.streamlinecarports.kiwi

# Classic Carport Durability Statement

Reference the NZ Building Code Section B-2 Durability

Classic Carports Should have a durability of 25 years if fixed, assembled and erected in accordance with the manufacturer's instructions. The following maintenance requirements from an essential part of this durability statement.

1. Posts: Shall be painted at five years, then every subsequent five years using a paint system recommended by a recognised quality paint manufacturer
2. Gutters and Downpipes are to be cleaned at intervals of four to six months per year, specifically after autumn leaves have fallen.
3. The underside of the roof MUST be thoroughly washed with clear water at least annually
4. Volcanic Ash Fallout: Any such fallout must be removed from roof gutters as soon as possible using a hose and soft brush and copious quantities of clean water. Ensure any resulting debris is removed from gutters
5. Within 2km of the coast, wash down roofing (especially underside) gutters and posts on a quarterly basis (once every 3 months) using a hose and soft nylon bristled brush. In this environment it is necessary in the event of a storm to wash the underside of the carport as soon as possible afterwards, since the highly corrosive salt deposits will accumulate and cause a rapid deterioration (particularly on tension bends on the underside) of the protective coatings of the steel product.
6. It is recommended in severe industrial or coastal environments that any unpainted surfaces be painted using approved surface preparation and a suitable painting system as specified by the paint manufacturer. Also, over painting for aesthetic reasons will greatly extend the ultimate life of the product.

DESIGN ENGINEER

These drawings / details have been

reviewed by Kirk Roberts Consulting

Engineers Ltd.

Job No: 2220165

Date: 31/3/2022

Signed: _____

# Post Foundation Details

DESIGN ENGINEER

These drawings / details have been reviewed by Kirk Roberts Consulting Engineers Ltd.

Job No: 2220165

Date: 31/3/2022

Signed:

Peg out the overall carport size (see below)

Accurately Measure off post positions. (Measurements are shown to outside perimeter of posts)

Dig Holes 300mm ∅ and 900mm deep

Apply “Blackseal plus” (a bitumen concrete waterproof membrane) to the posts, 50mm above and 50mm below the concrete level interface to protect posts against corrosion damage. (Cleaning area with an alcohol-based solvent is recommended prior to application)

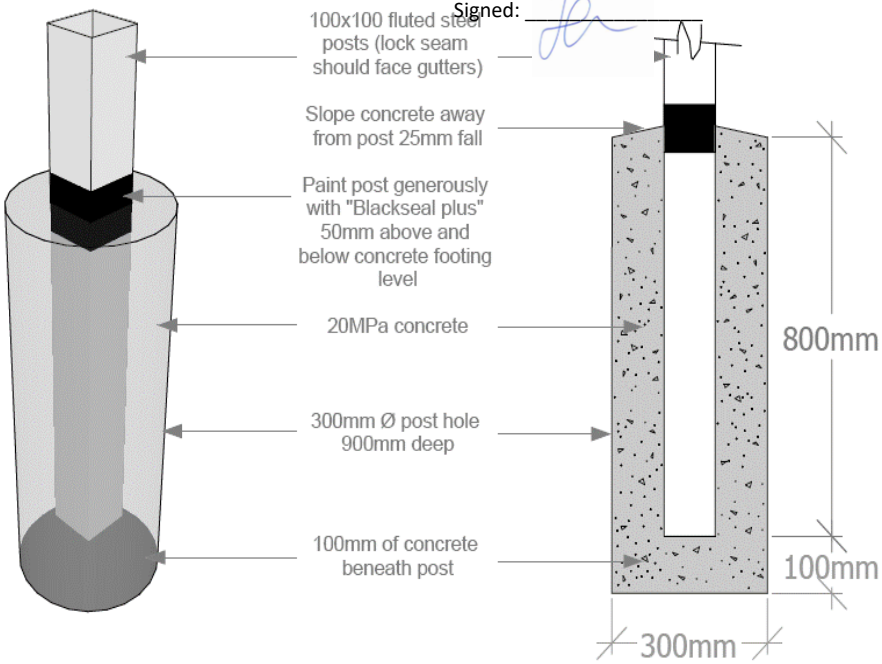


Position posts with correct vertical alignment and brace for stability. Use one post for a datum height and work off that to arrive at the heights of the other posts. Ensure downpipe side of carport is lower than opposite side to allow for roof solve. (25mm fall for a single carport and 100mm fall for a double carport)

Double Check the posts are straight and the locations are correct then pour concrete around the posts and trowel to a smooth finish with a 25mm gradient.

Where posts have a height greater than 3.0 meters above ground (or for optional extra strength) posts are to be filled with course grout with a maximum aggregate size of 9mm (crusher dust) one part cement to four parts aggregate with no sand and a D12 bar full length of post. (Complying with NZS Masonry Construction Materials & Workmanship)

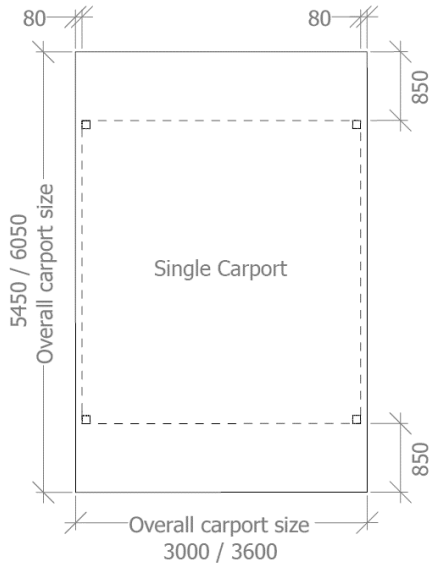


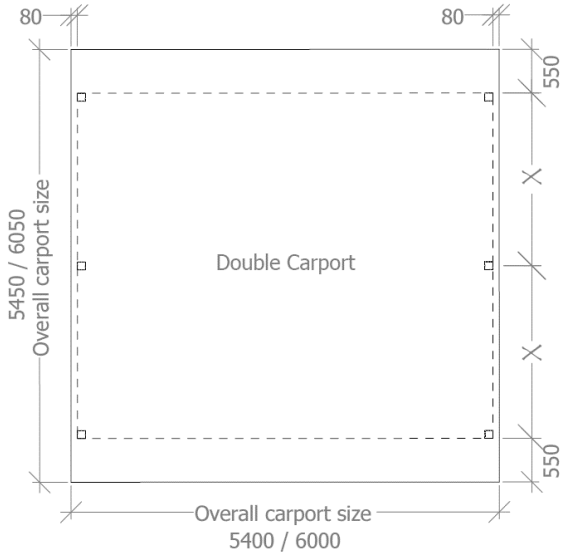


0800 CARPORTS carports@streamline.kiwi streamlinecarports.kiwi

911 Tremaine Ave, Palmerston North 4414, PO Box 5333

# POST FOUNDATION DETAILS

Please Note: These are not included in the standard Kitset. These are required for bolting posts to a concrete slab and are an extra cost

For all carports using standard 100x 100x 0.75 legs. Not for use with legs requiring grouted interior. Summary:

carport base plate to replace stand pile footing.

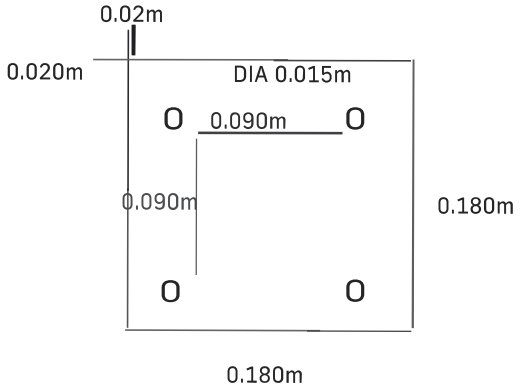


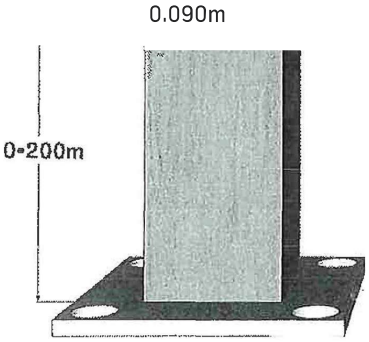


**Notes: Requires concrete slab with:**

Minimum thickness of 100mm
Minimum 20MPa concrete with reinforcing mesh
Trubolts are to be no closer that 100mm from edge of slab

Base Plate is 180mm x 180mm x 10mm mild steel plate connected to 89mm X 89mm X 5mm x 200mm high SHS with a 5mm weld all around. Four 15mm holes one in each corner for trubolts, to be drilled 20mm in from each corner, to the centre of dfameter. The completed Base plate isthen hot dip galvanised.

Trubolts are to be M12 x 100mm size, one in each corner of the plate.

10075 posts are fitted over the base upright and are attached using four 14gX 30tek screws per side of post (totalling 16per post).

10075

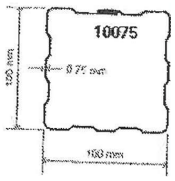


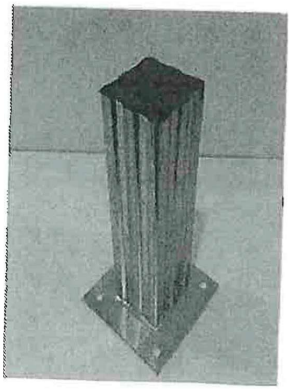

## CONSTRUCTION DETAIL

STREAMLINE

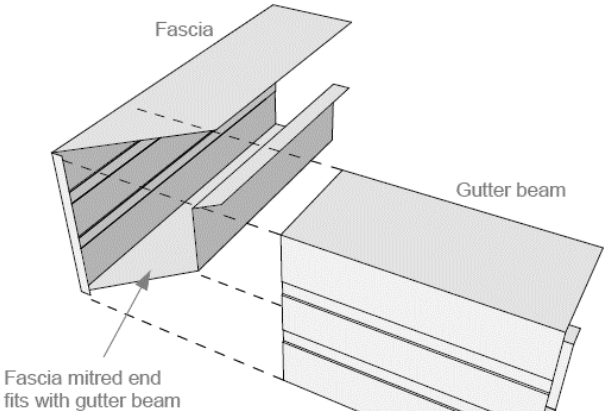


Ensure all sides are equal
and fixed tight and square.

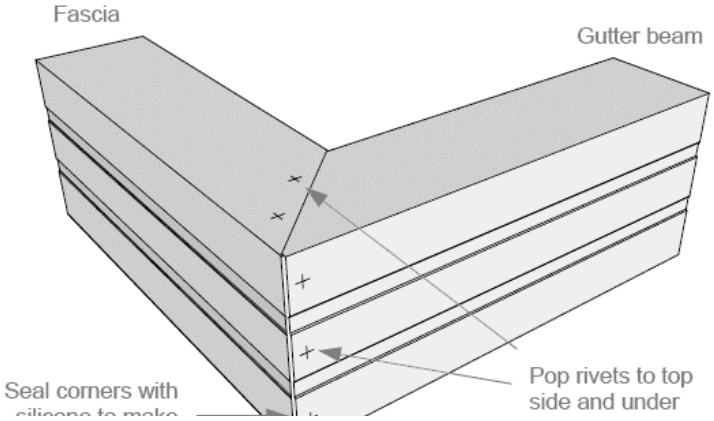


Clean away all iron swarfe
to prevent corrosion.

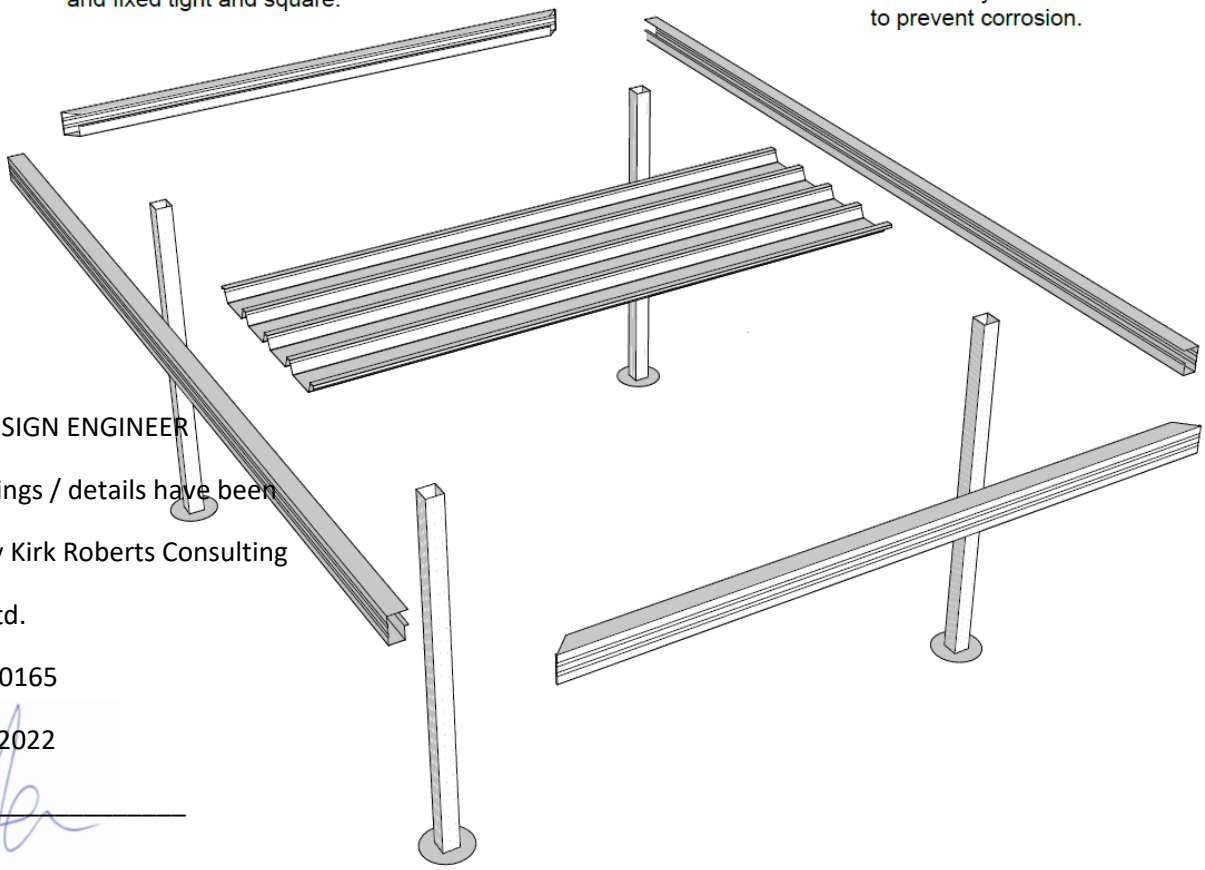

DESIGN ENGINEER

These drawings / details have been reviewed by Kirk Roberts Consulting Engineers Ltd.

Job No: 2220165

Date: 31/3/2022

Signed: _____

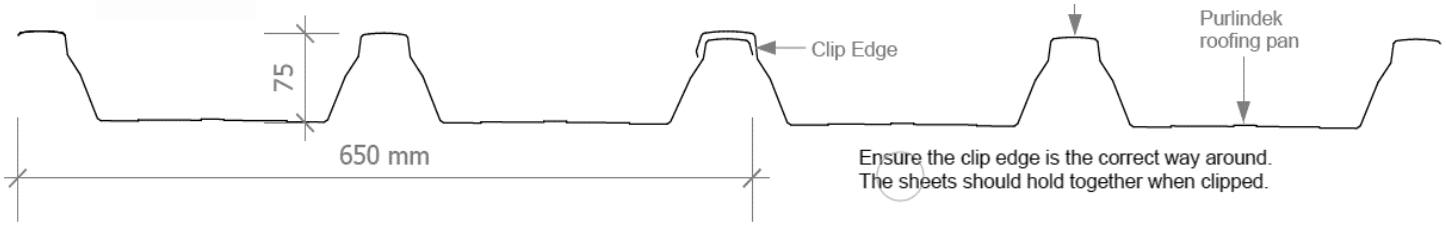


Ensure the clip edge is the correct way around.
The sheets should hold together when clipped.

0800 CARPORTS carports@streamline.kiwi streamlinecarports.kiwi

911 Tremaine Ave, Palmerston North 4414, PO Box 5333

# Gutter/Frame Details

STREAMLINE

## Order of Construction:

Remove any protective plastic wrap from coloursteel items before fixing in place.

Erect posts square allowing for roof slope. At lease 25mm fall for a single carport/100mm fall for a double carport. See foundation details page)

The Gutter Beam can now be fitted. First drill the bolt holes in the posts, then lift the gutter beam into place and transfer the hole positions over. Fix using M10 x 20mm bolts, buts and washers. Seal between washer and gutter with silicone.

Once both gutter beams are up, mark 600mm centres along them to indicate where each sheet of roofing will cover to. Next slide the roofing sheets into the gutter beams, clipping the overlaps together as they are inserted. Once all the sheets are positioned and clipped together, check that the pans of the roof profile are not sitting directly over any of the posts. (The will allow for ease of riveting) Rivet the roofing to the gutter beams as shown in details.

NOTE: The stability of your carport depends on the fixings being tight.

Clip in fascia ends and rivet together, sealing the corners with silicone to make them watertight.

Determine downpipe positions. Cut a hole through gutter, rivet PVC dropper in place, seal with silicone.

Clean away swarf throughout the construction process. Any iron filings or swarf left on your carport will quickly cause discolouration.

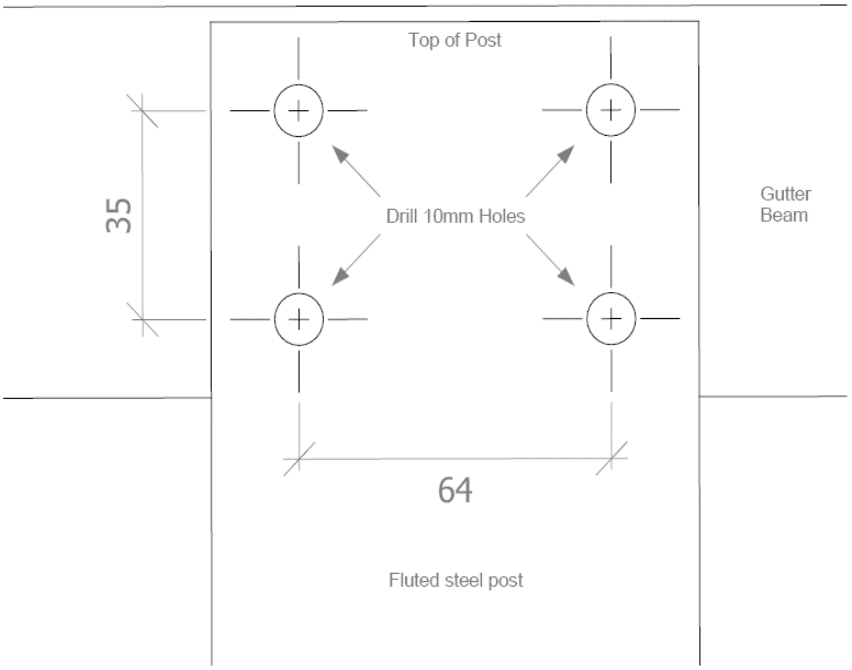


Post bolt hole positions

DESIGN ENGINEER

These drawings / details have been reviewed by Kirk Roberts Consulting Engineers Ltd.

Job No: 2220165

Date: 31/3/2022

Signed: _____

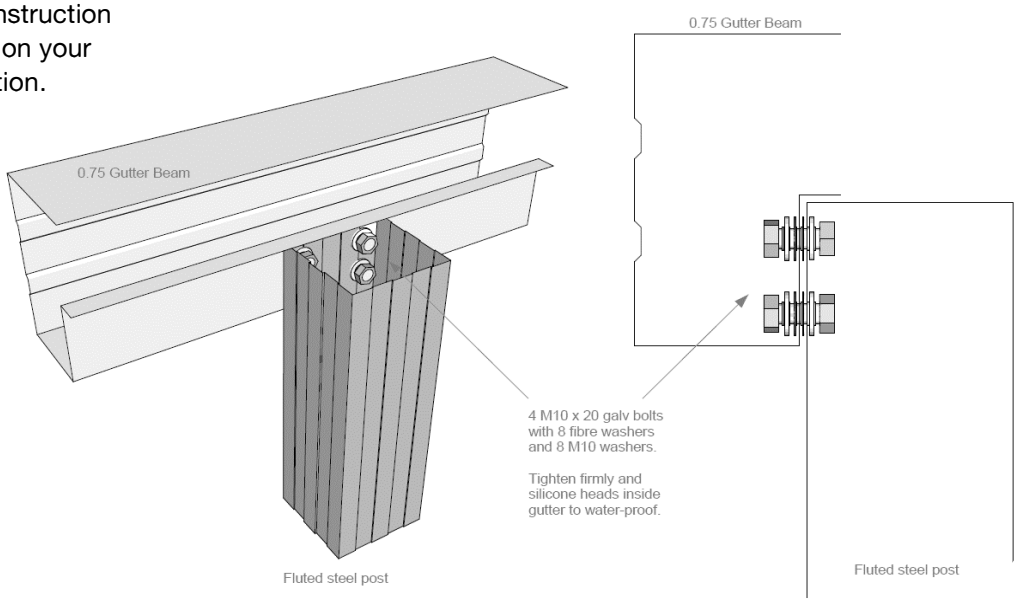


0800 CARPORTS carports@streamline.kiwi streamlinecarports.kiwi

911 Tremaine Ave, Palmerston North 4414, PO Box 5333

# Roof Fixing Details

STREAMLINE

Do not fix roofing in place until all the sheets have been laid out and positioned correctly.

Fix pop rivets from underside of roof or from a ladder to top side.

Take care when pre-drilling rivet holes that the roofing is aligned correctly (eg: Carport is not pushed out of square)

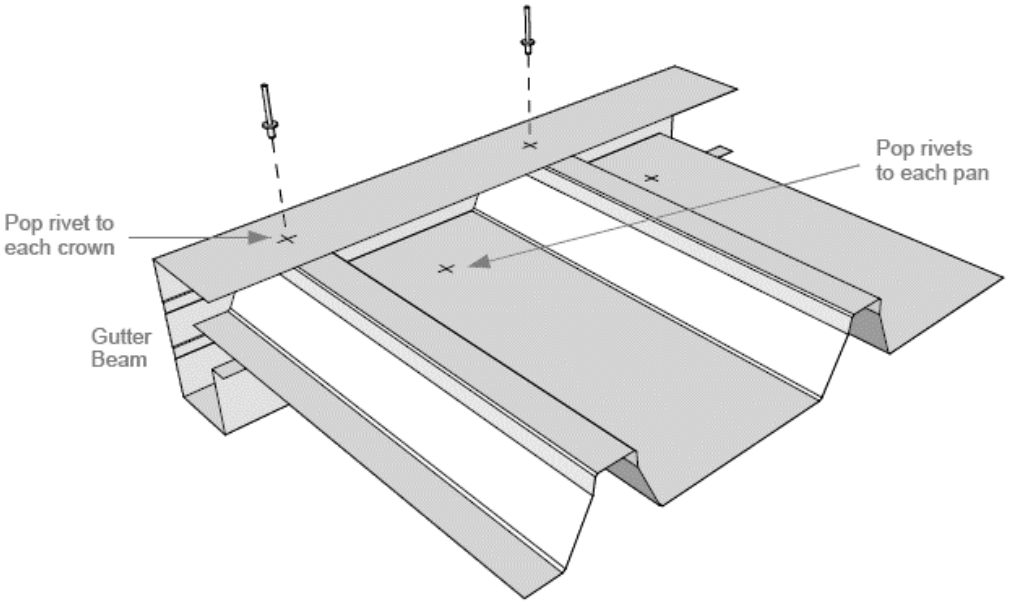


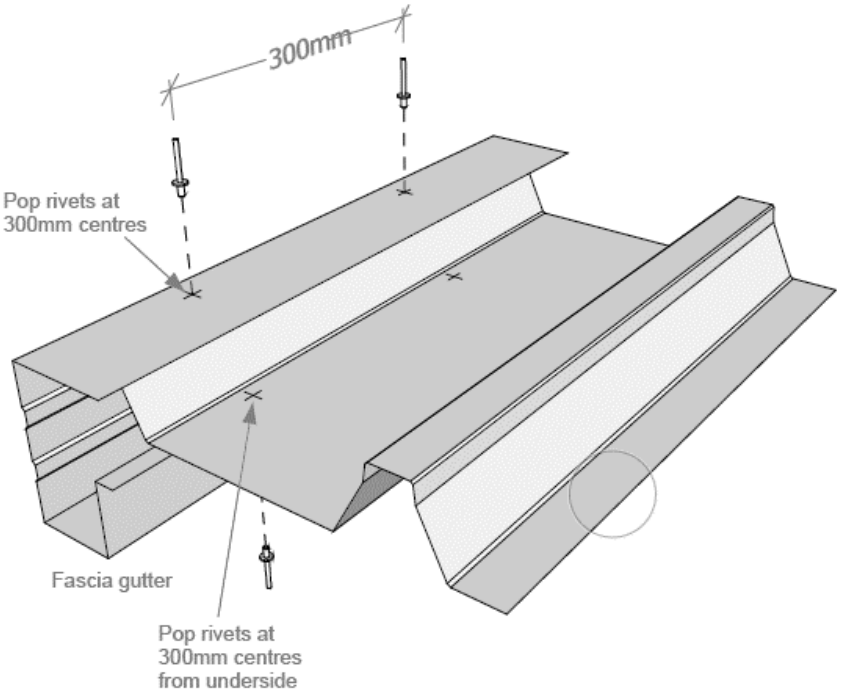


Do not walk on the roof until all the pop rivets are in place.

Ensure all iron swarf from drilling is thoroughly washed off the carport. Any iron filings or swarf will quickly cause discolouration of your carport

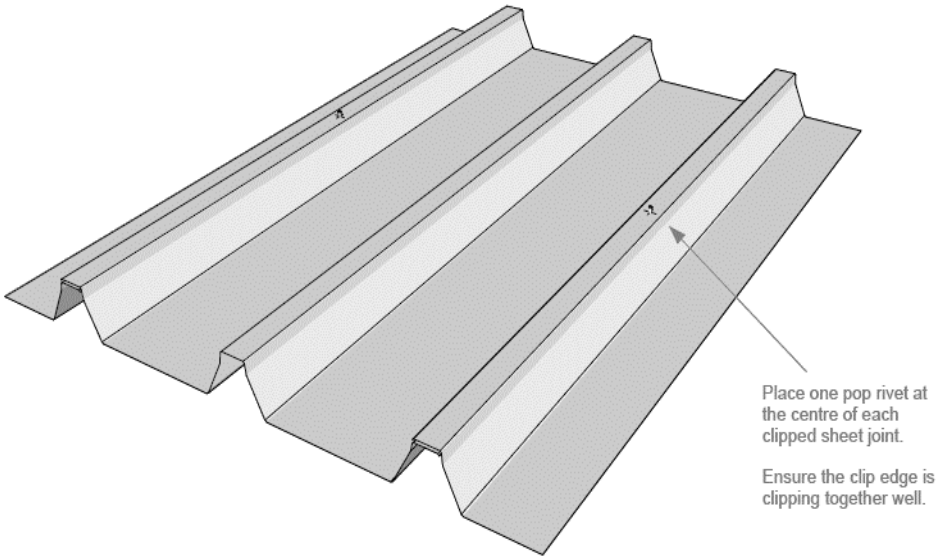


DESIGN ENGINEER

These drawings / details have been reviewed by Kirk Roberts Consulting Engineers Ltd.

Job No: 2220165

Date: 31/3/2022

Signed: _____

0800 CARPORTS carports@streamline.kiwi streamlinecarports.kiwi

911 Tremaine Ave, Palmerston North 4414, PO Box 5333

# Fiberglass Panel Install

See Instructions below for installing Fiberglass Panel and Cap.
**Please Note:** single carports (Up to 3.6m wide) have 1 Support Bracket per panel
Double Carports (3.7—6.0m wide) will have 2 Support Brackets per panel.
(Support Brackets are supplied standard at 1.4m long, unless a custom full length bracket is ordered)

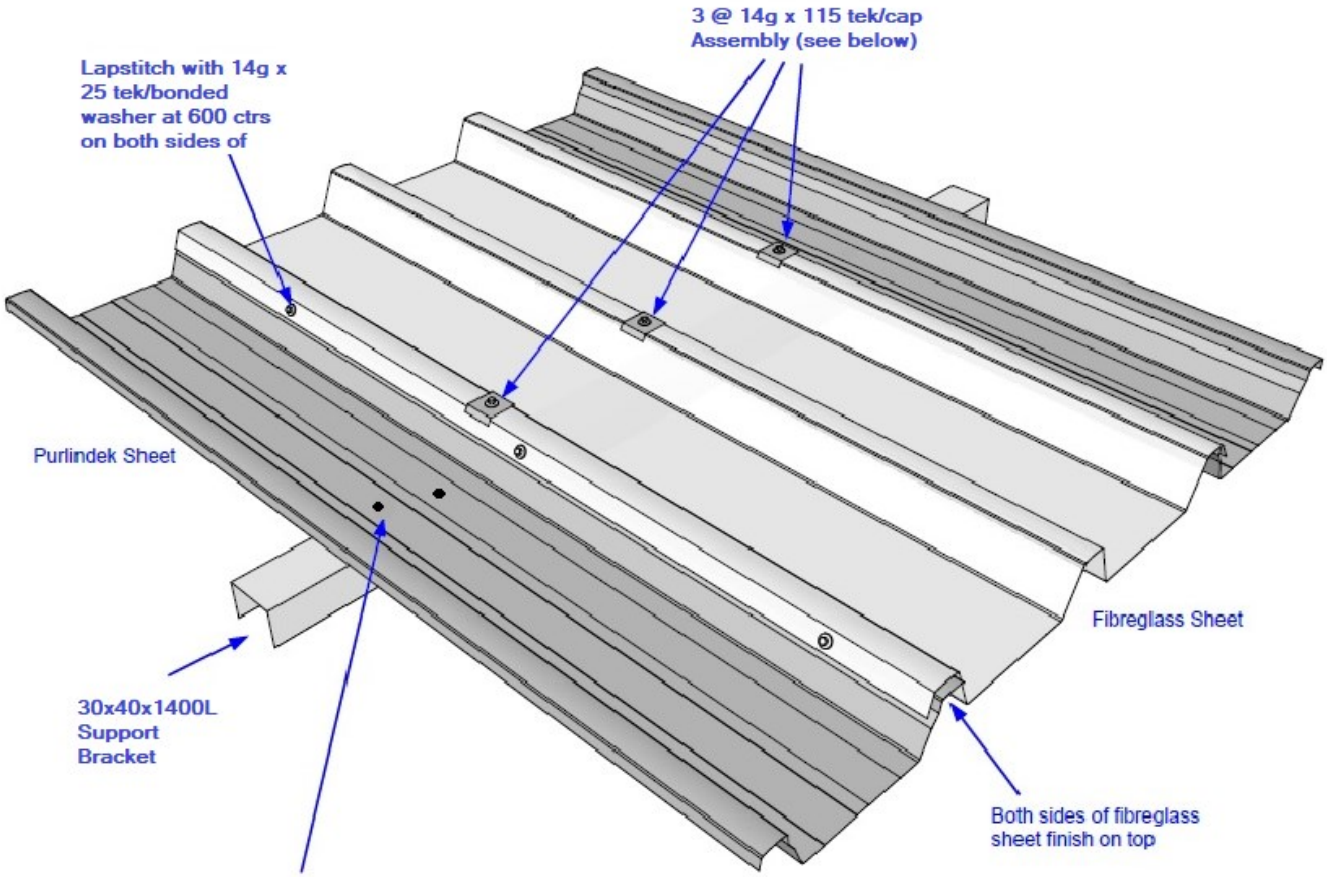


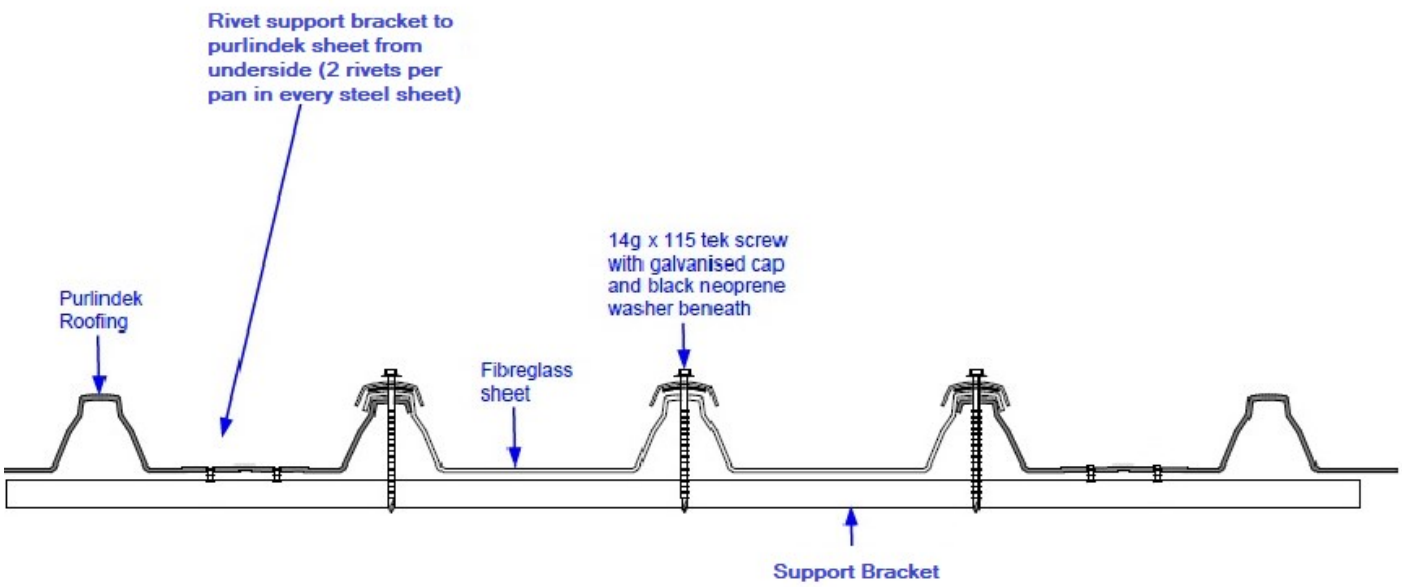

# Fiberglass Panel Install continued...

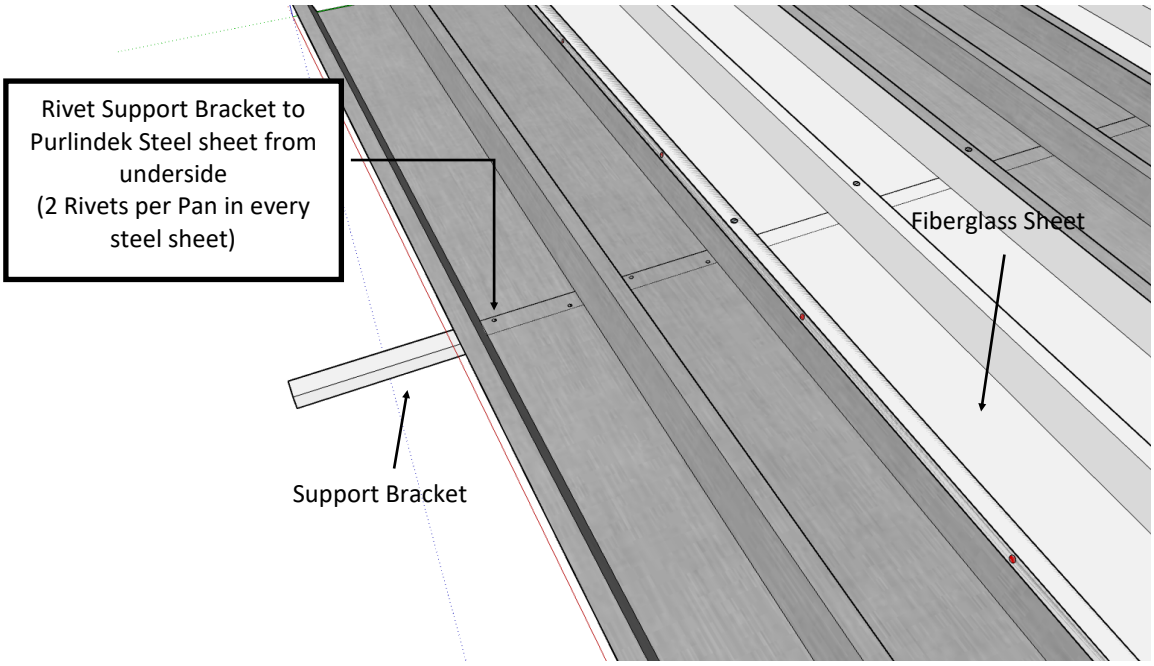


## Installing the Support Bracket Cap

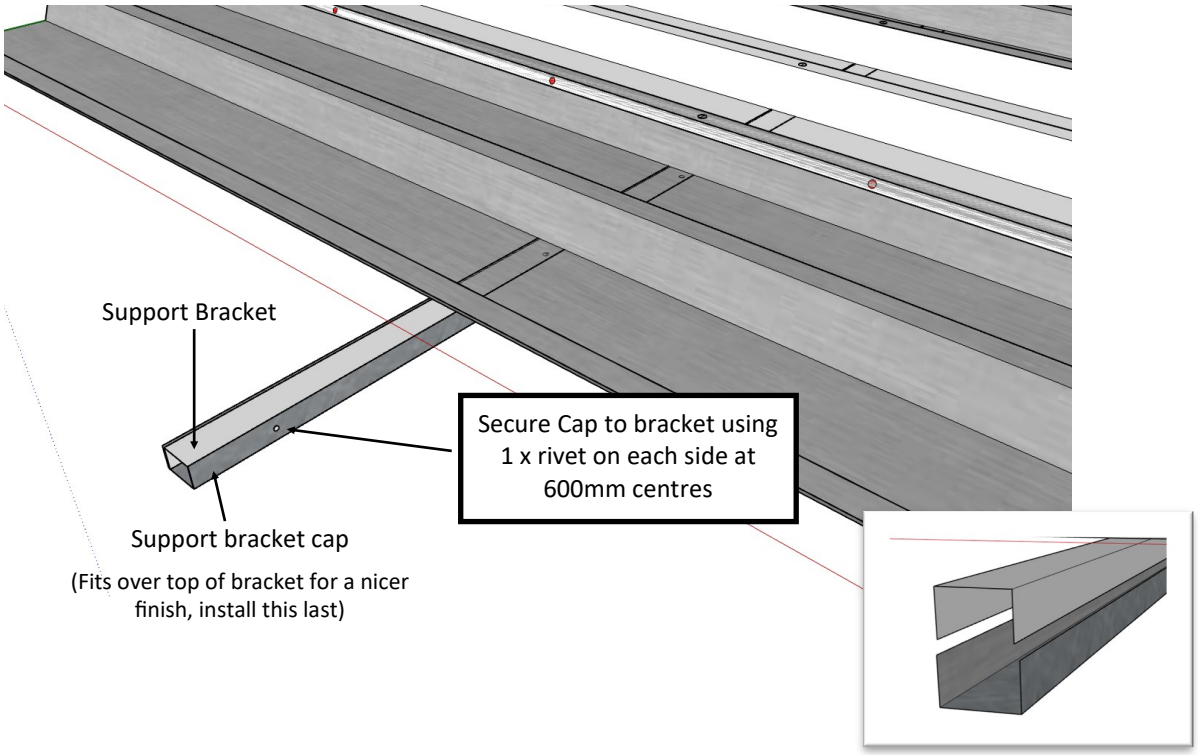

# Gutter Beam Joiner

**(Where Applicable)**

For use in non-standard or modular carports where it is necessary to join extra-long gutter beams

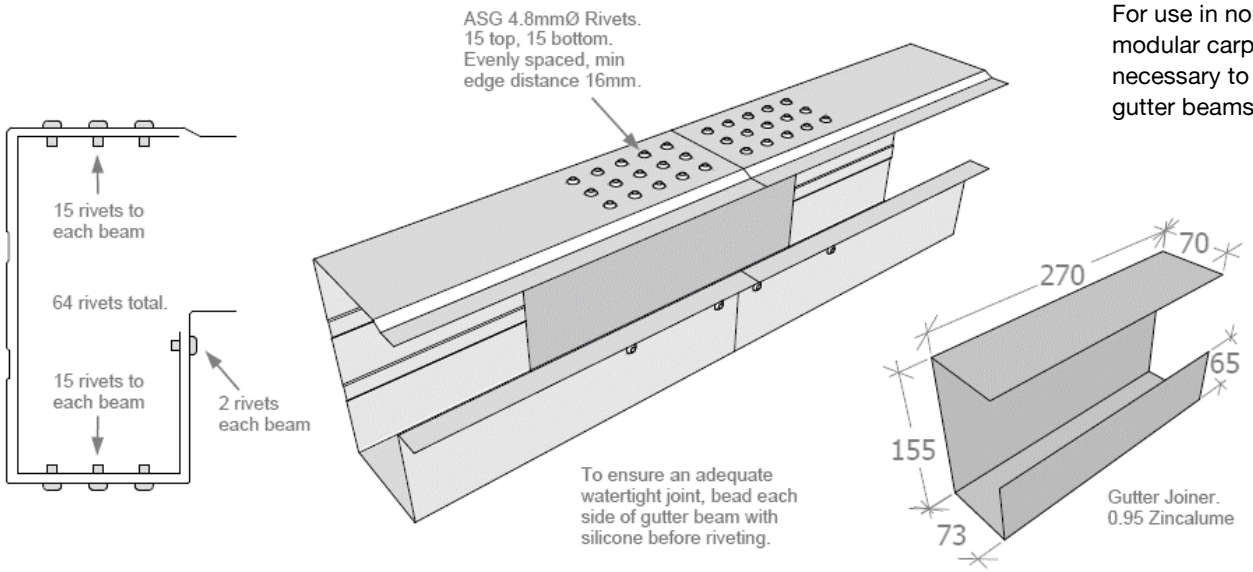


## Modular Carports

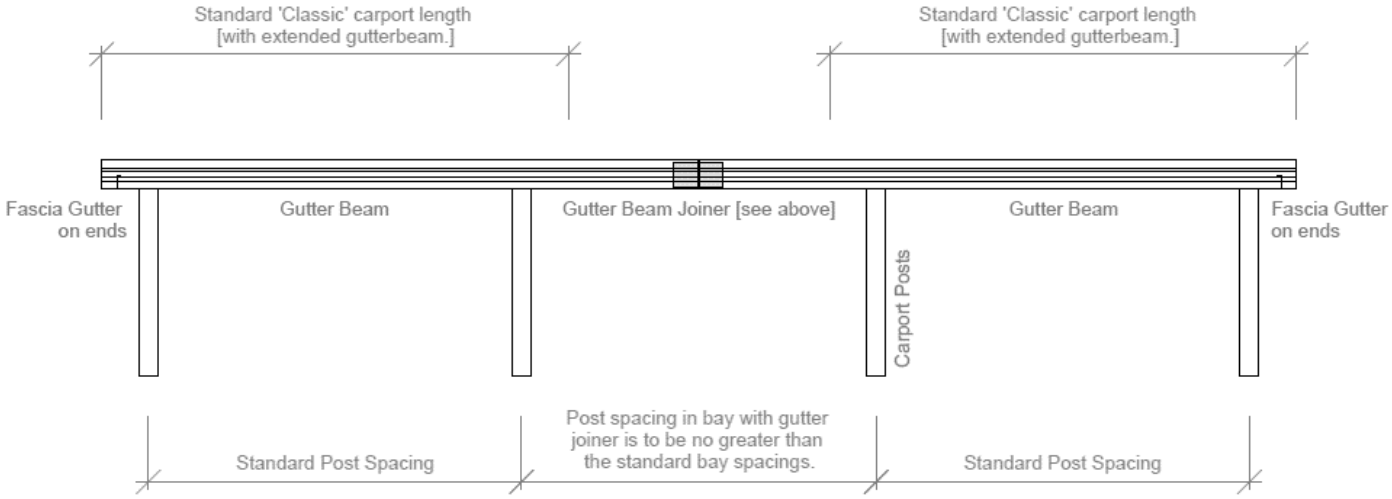


Modular Carports to be connected 'end on end' only, extending the length of the carport, not the width.

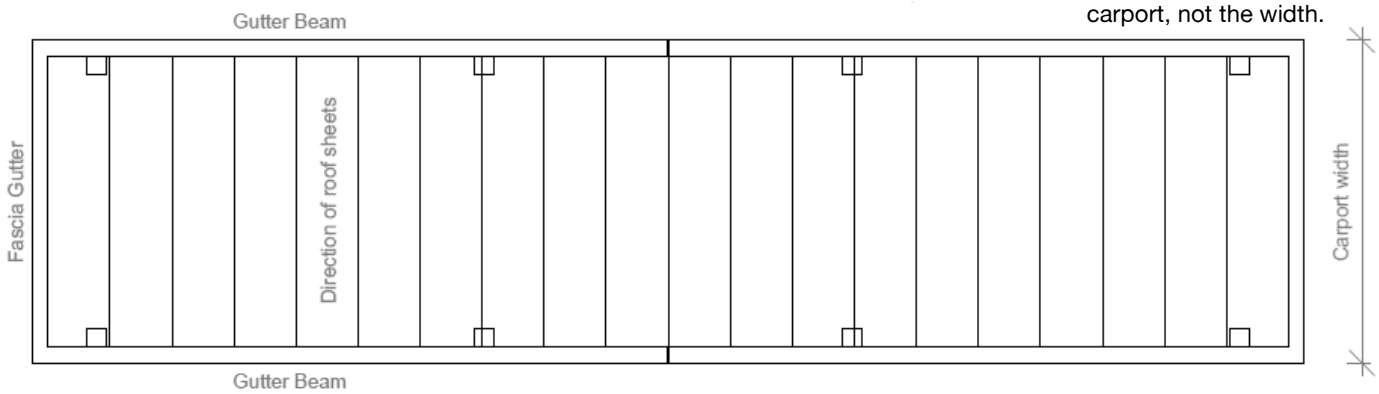



0800 CARPORTS carports@streamline.kiwi streamlinecarports.kiwi

911 Tremaine Ave, Palmerston North 4414, PO Box 5333

STREAMLINE

**IMPORTANT**

# CARPORT ERECTION

1. Main Gutter Beams to be temporarily braced true and straight at centre span until erection is fully completed. i.e all pop rivets are in place

2. Under no circumstances is the roof to be walked on until erection is complete, and then only when necessary to carry out maintenance. ***Step only on the pans NOT on the crowns***

3. Do not walk on fibreglass rooflites, carefully step over them.

4. All Pop-riveting to be done from underneath the carport or using a ladder adjacent to the carport only. Ensure fixing centres match the applicable construction details.

5. Where posts have a height greater than 3.0m above ground, they are to be filled with course grout. (See post foundation details page)

6. Ensure all iron swarf from drilling is thoroughly washed off the carport. Any iron filings or swarf will quickly cause discolouration of your carport.

0800 CARPORTS carports@streamline.kiwi streamlinecarports.kiwi

911 Tremaine Ave, Palmerston North 4414, PO Box 5333